Maths Year 5
Angles w/c 29.06.20

The objective we are working on this week is:

- know angles are measured in degrees: estimate and compare acute, obtuse and reflex angles.
- identify angles at a point and one whole turn (total 360°)
- identify angles at a point on a straight line and ½ a turn (total 180°)

Monday 29th June

Use the link to help you remember about angles

https://www.bbc.co.uk/bitesize/topics/zb6tyrd/articles/zg68k7h

Also use this step by step guide to help you.

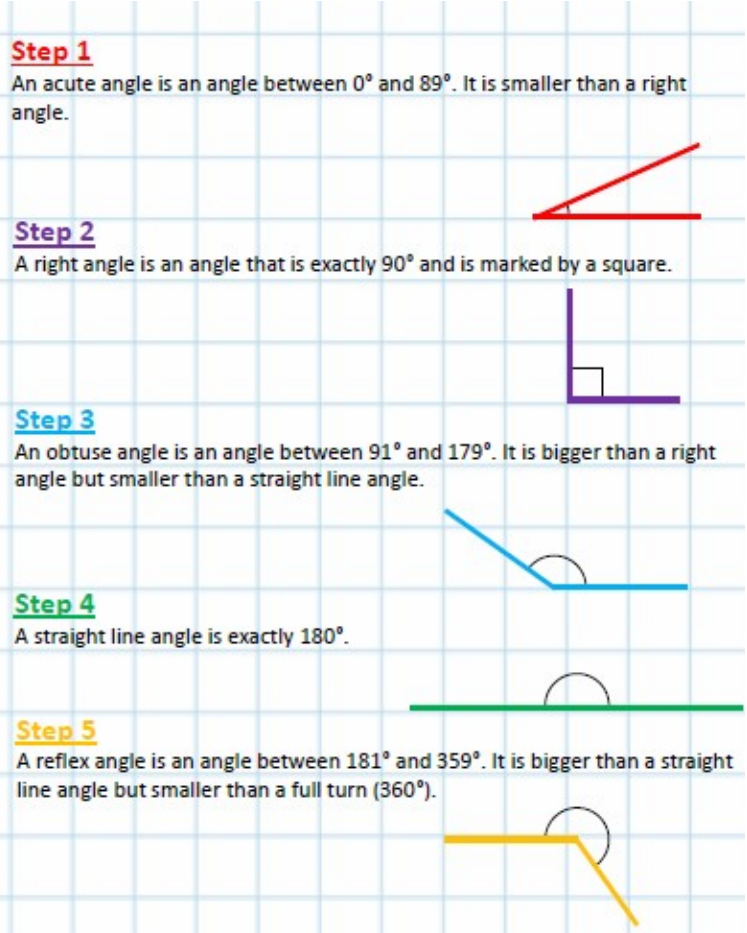

Now have a go at labelling these angles

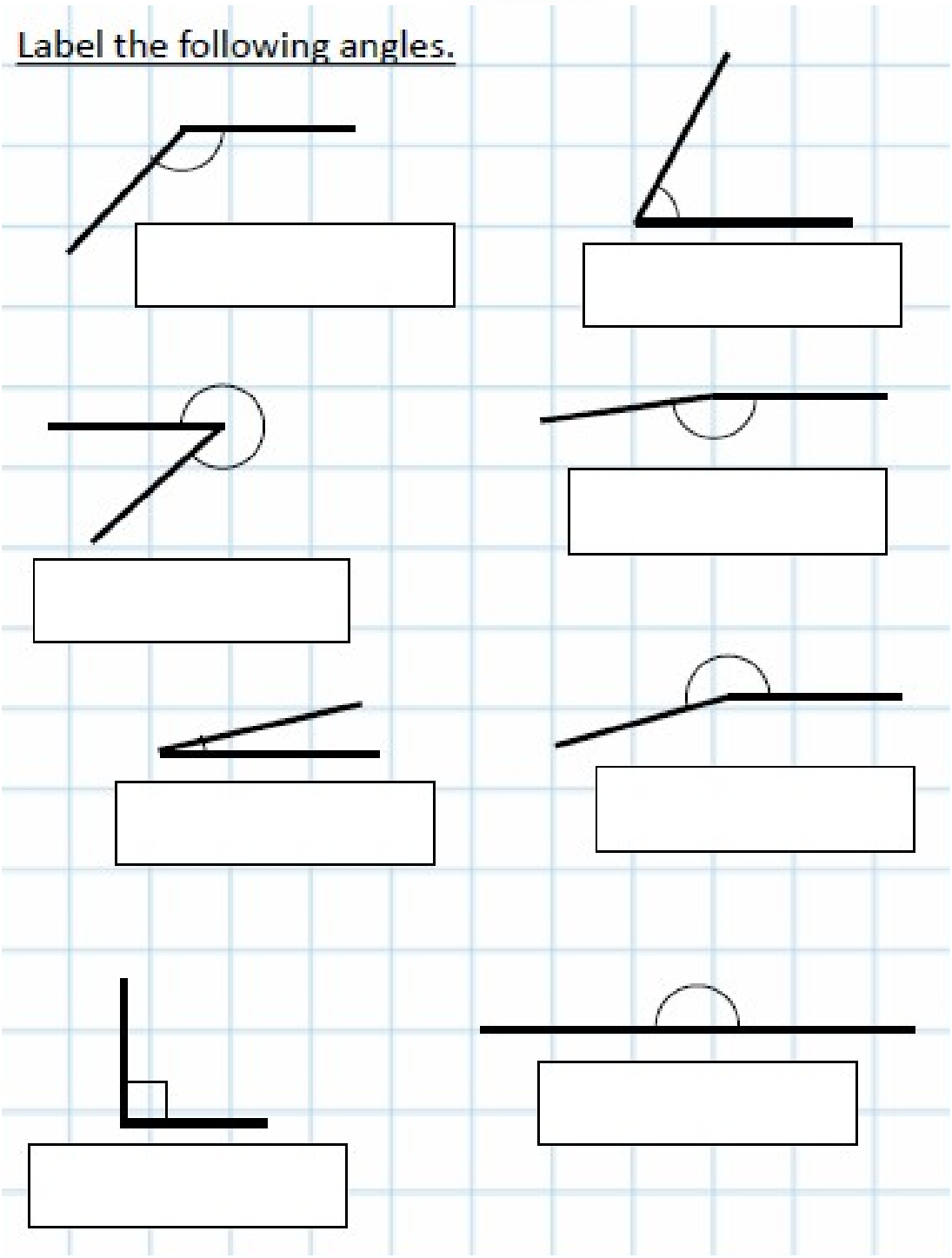

Tuesday 30th June

Have a look back at the angles you labelled yesterday. Could you estimate the size of the angle? Here is a picture of a protractor and a web guide to help with your estimating.

https://www.bbc.co.uk/bitesize/guides/zrck7ty/revision/4

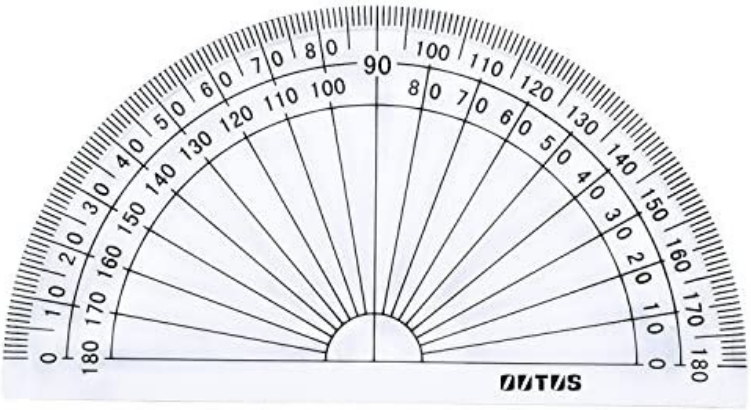

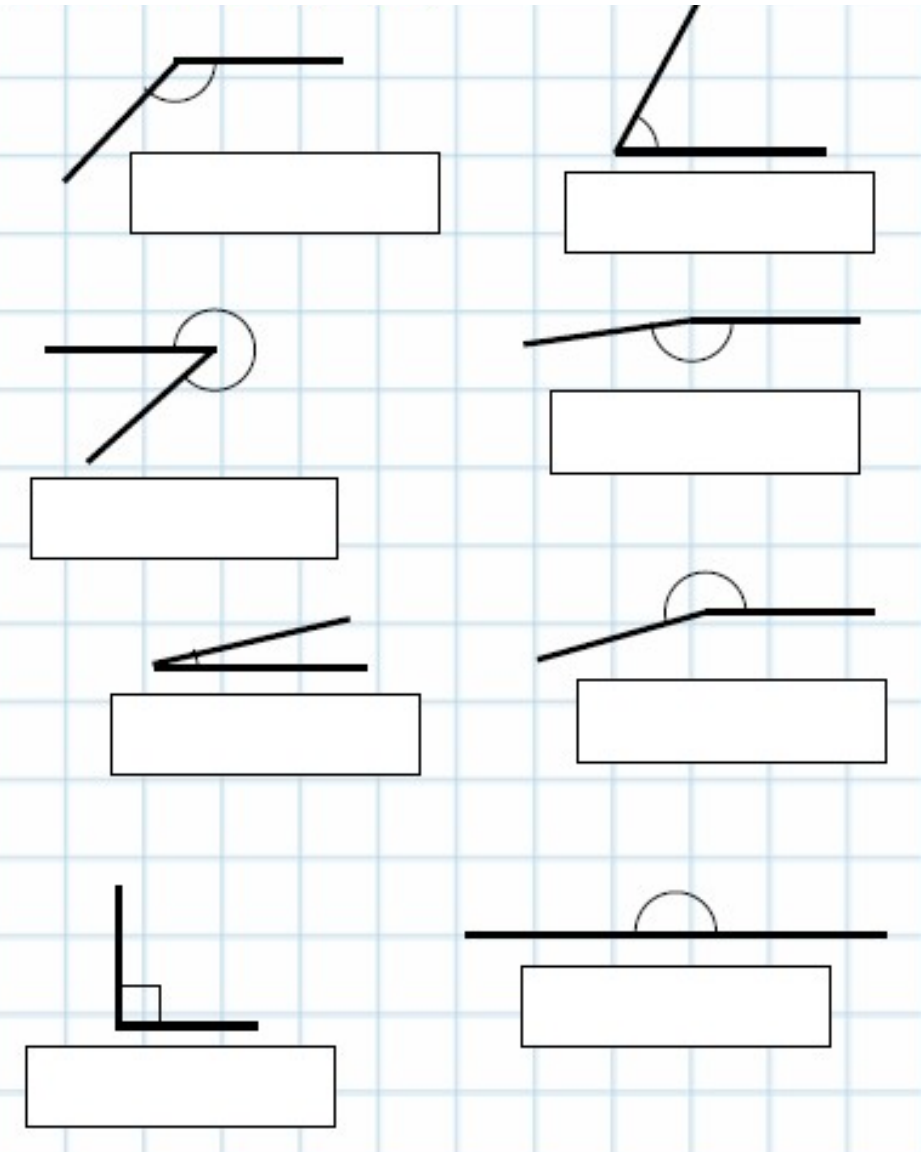

Wednesday 1st July

Here is a step by step guide to show you how to find missing angles.

Step 1

To find the missing angles of a right angle, we know that a right angle is exactly 90°, so we add the known values, then subtract from 90°.

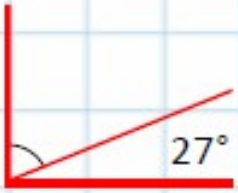

90 - 27 = 73

So the missing angle is 73°

Step 2

To find the missing angles from a straight line angle, we know that this angle is exactly 180°, so we add the known values, then subtract from 180°.

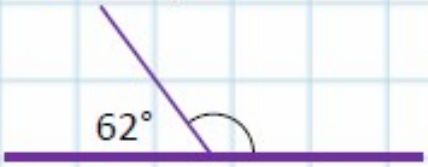

180 - 62 = 118

So the missing angle is 118°

Step 3

To find the missing angles from a full turn, we know that a full turn is exactly 360°, so we add the known values, then subtract from 360°.

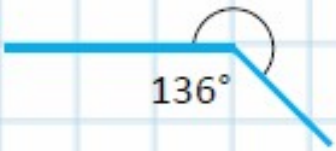

360 - 136 = 224

So the missing angle is 224°

1. What do angles on a line add up to?
2. What do angles around a point add up to?

Now use what you have learnt to find the missing angles.

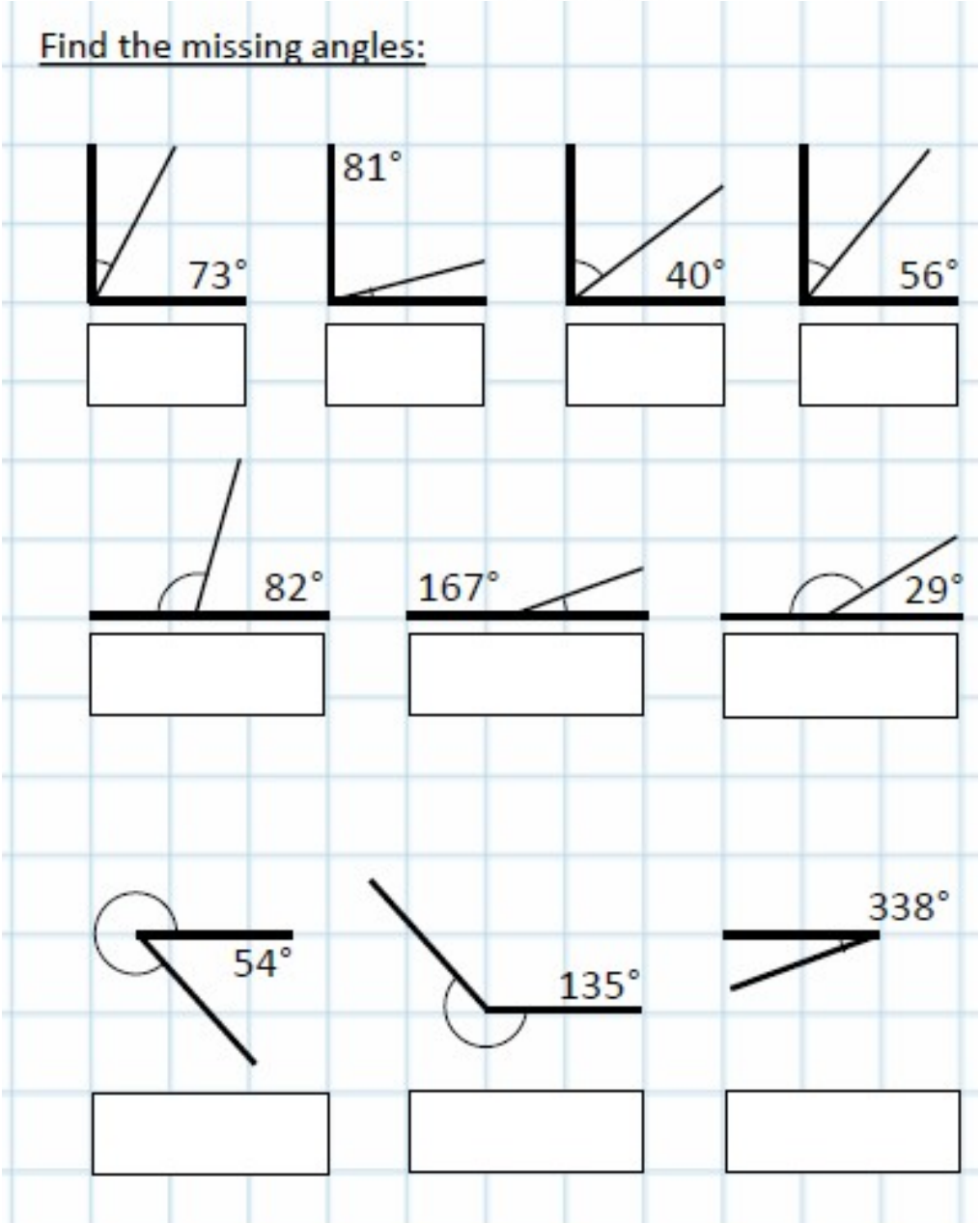

Thursday 2nd July

Write some top tips for finding the missing angle on a line and use them to help you with the activity below.

Here are some angles on a line, can you find the missing angle?

Find the missing angles.

Example:

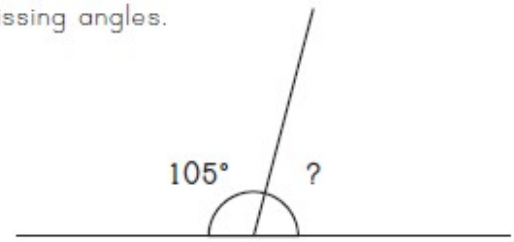

The missing angle is:

180 - 105 = 75°

1.

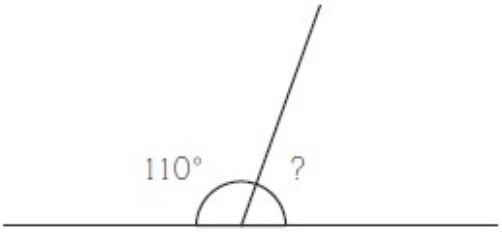

The missing angle is:

2.

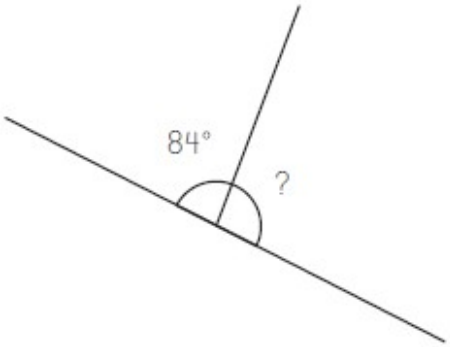

The missing angle is:

3.

The missing angle is:

4.

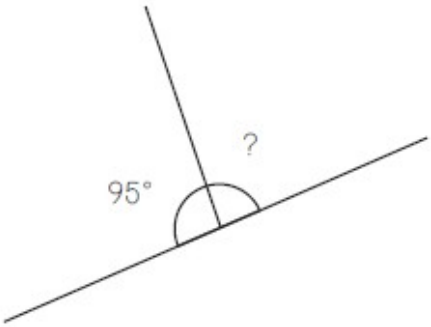

The missing angle is:

5.

The missing angle is:

6.

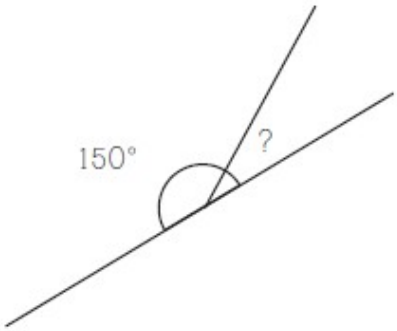

The missing angle is:

7.

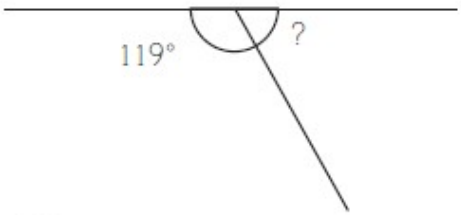

The missing angle is:

8.

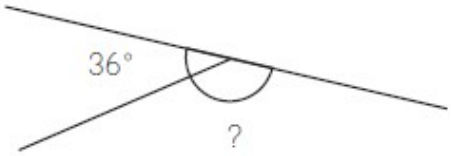

The missing angle is:

9.

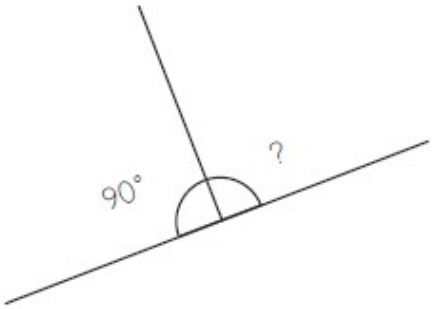

The missing angle is:

10.

The missing angle is:

Friday 3rd July

Today we will be finding missing angles around a point. **Remember that opposite angles are equal**.

Example:

I know that angles around a point add up to 360°

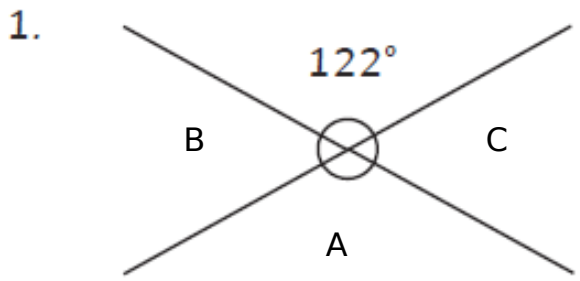

I know that opposite angles are equal so angle A = 122°. That also means that angles B and C are going to be the same.

122° + 122° = 244° (Total of the known angle and angle A)

360° - 244° = 116° (Total of angles around a point take away the total of known angle and angle A)

116° is the total of angle B and angle C. As they are the same we have to divide 116° by 2 to find the size of each angle.

116° ÷ 2 = 58°

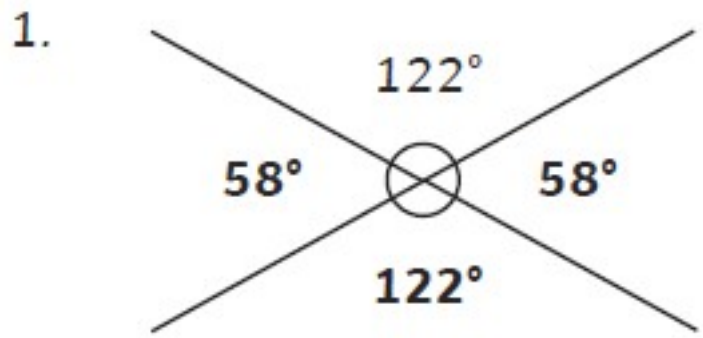

Now have a go at finding these missing angles

1.

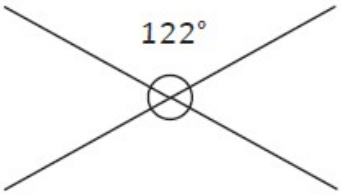

2.

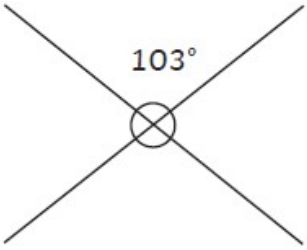

3.

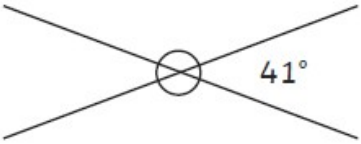

4.

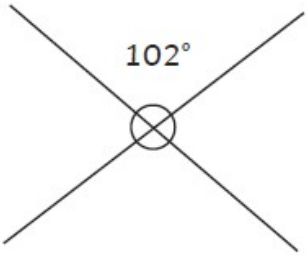

5.

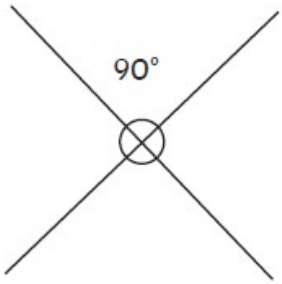

6.

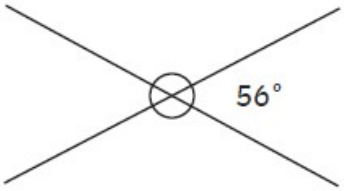

7.

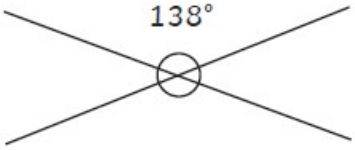

8.

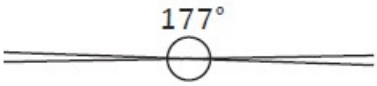

9.

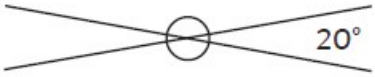

10.